OEM Automatic Sp. z o.o.
ul. Działkowa 121 A, 02-234 Warszawa
+48 22 863 27 22 | info@pl.oem.se | www.oemautomatic.pl

BEZPIECZNIK ELEKTRONICZNY 4-KANAŁOWY

PISA-M

PISA-M-4ADJ
Zabezpieczenie 4 kan.1-8A Adjustable cur

- 4 kanały (4x 1-8 A)
- Alarm wspólny lub indywidualny
- Charakterystyka szybka lub wolna

OPIS PRODUKTU

Bezpiecznik elektroniczny Pulse PISA-M to 4-kanałowy bezpiecznik montowany na szynie DIN, przeznaczony do systemów 12 i 24 V DC. Jest bardzo mały, ma szerokość zaledwie 22,5 mm.

SPECYFIKACJA TECHNICZNA

Back-feeding loads	30 V DC
Dopuszczenia	CE, UL 61010-1
Głębokość	98 mm
Input connector	Push-In
Masa	0,1 kg
Materiał obudowy	Plastikowy
MTBF (IEC 61709)	1 142 000 h 4x5 A 40 C
Napięcie zasilania DC (max)	30 V DC
Napięcie zasilania DC (min)	9,6 V DC
Output connectors	Push-In
Prąd wyjściowy / kanał	Channel 1-4 :1, 2, 3, 4, 6, 8 A
Prąd wyjściowy max.	20 A
Przekrój max. kabla	2,5 mm²
Rodzaj zacisków	Sprężynowy samozaciskowy
Spadek napięcia na półprzewodniku	130 mV
Sprawność	98 %

Stopień ochrony IP	IP20
Szerokość	23 mm
Wysokość	104 mm
Żywotność	268 000 h 4x5 A 40 C

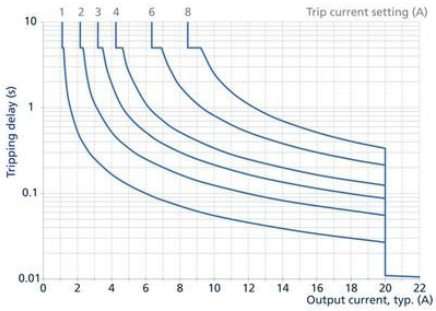

Fig. 6-2: **Tripping delay depending on current slow tripping characteristic**

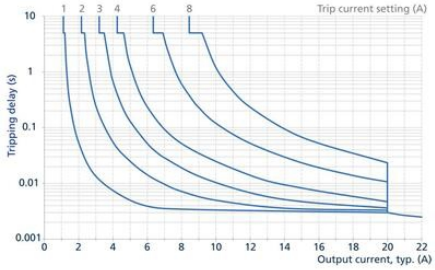

Fig. 6-1: **Tripping delay depending on current fast tripping characteristic**

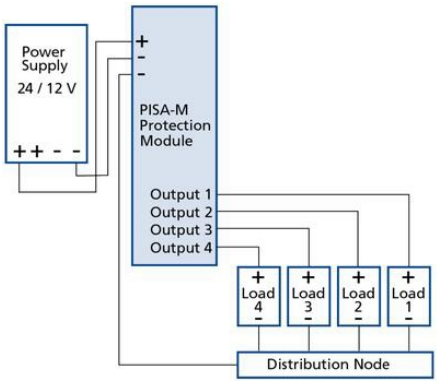

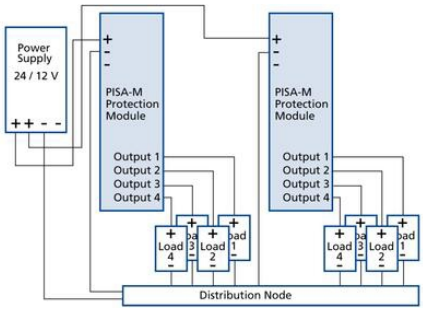

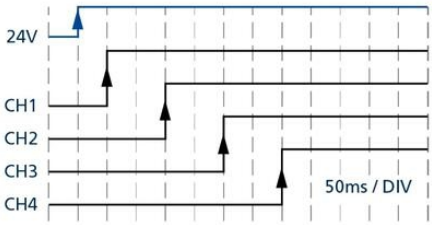

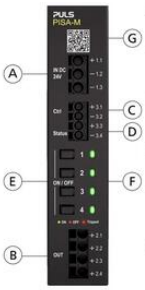

Fig. 14-1: **Front side**

A Input Terminals
Identical poles are internally connected.
(+) 1.1 Positive input pole
(-) 1.2, 1.3 Negative input pole

B Output Terminals
(+) 2.1 Channel 1 positive output pole
(+) 2.2 Channel 2 positive output pole
(+) 2.3 Channel 3 positive output pole
(+) 2.4 Channel 4 positive output pole

C Control Signal Input
(+) 3.1 Signal input positive pole
(-) 3.2 Signal input negative pole
Signal input can be used to send reset signal (1 s active) or for data communication using Digital Coded Interface.

D Status Signal Output
(+) 3.3 Signal output positive pole
(-) 3.4 Signal output negative pole
Signal output can be set to several operation modes.

E Channel Control Buttons
⇨ Press of single button to toggle selected output channel ON / OFF
Required duration of button-press can be configured
⇨ Long press of single button to reset selected channel
⇨ Press of button combinations to enter configuration modes
Note: See user manual for more information

F Output Channel Status LEDs
- Green: Output channel ON
- Yellow: Output channel overload – prewarning before tripping channel
- Red: Output channel turned OFF (manually or remotely)
- Red (flashing): Output channel tripped due to overload of this channel
- Red (double-flashing): Output channel tripped due to device overload protection or power supply protection, see chapter 9 and 10
- LED OFF: Device is not powered

Note: For other blinking codes, see user manual

G QR code for direct access to documentation

5. Turn Output Channels ON or OFF

Each output channel can be switched ON and OFF individually.
The required duration of button press can be configured, see chapter 10 "Button Reaction Style".

- Output channel is ON → LED lights up green
- Output channel is OFF → LED lights up red

⇨ Press the Channel Control Button (CCB) for the output channel to be modified depending on the selected button reaction style:
⇨ 50 ms in standard mode or
⇨ 1 s in long press mode
✓ The output channel will switch between ON and OFF.

6. Check Current Tripping Setpoint of Each Output Channel

Each LED indicates the current tripping setpoint for each output channel.
For example: LED 1 shows setting of output channel 1.

1. The number of flashes indicates current setting in ampere.
   For example: LED 1 flashes 4 x, set current tripping setpoint for output channel 1 is 4 A.
2. The sequence will be shown two times.
3. The device exits the checking mode and will return to regular operation.

⇨ Press **CCB1** and **CCB4** simultaneously for **50 ms**.
✓ Each LED will indicate the current tripping setpoint for each output channel by flashing green.
ℹ Pressing any button during LED flashing stops the checking mode immediately.

12. Select Communication Mode

ℹ The device will exit setting mode automatically after **4 s** inactivity.

The device is equipped with two signal ports. Signal status output (pin 3.1 – 3.2) and signal control input (pin 3.3 – 3.4). These ports can be configured as follows:

Tripping Alarm:
Switch closes when at least one or more output channels are tripped.

- Status Signal Output ON → one or more output channels are tripped
- Status Signal Output OFF → no output channel tripped

Digital Coded Interface (DCI):
For more detailed information regarding DCI mode, please refer to the product datasheet.

Output Channel Off Alarm:
Switch closes when one or more channels are tripped or manually turned off.

- Status Signal Output ON → one or more output channels are tripped / turned off
- Status Signal Output OFF → all output channels are turned on

OK-Signal:
Switch closes if all output channels are turned on.

- Status Signal Output ON → all output channels are turned on
- Status Signal Output OFF → one or more output channels are tripped / turned off

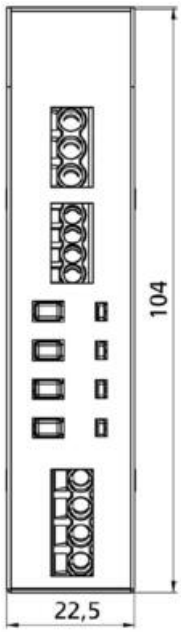

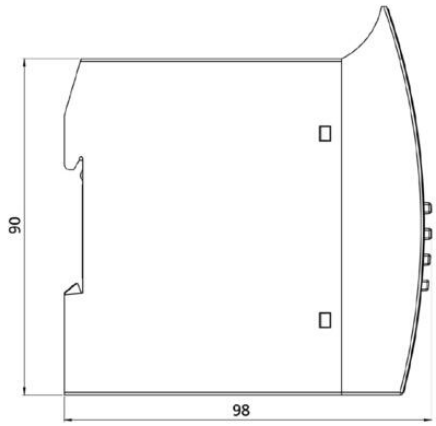

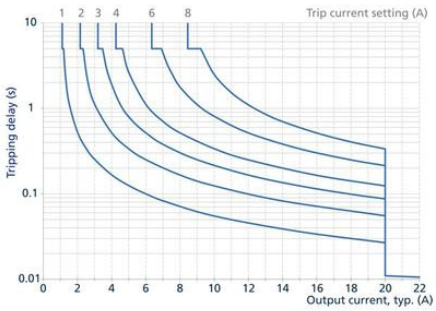

Fig. 6-2: **Tripping delay depending on current slow tripping characteristic**

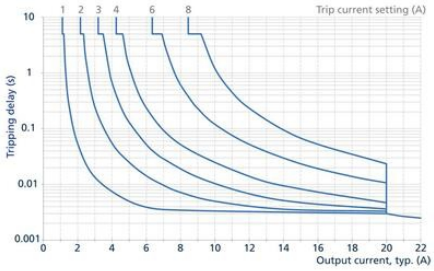

Fig. 6-1: **Tripping delay depending on current fast tripping characteristic**

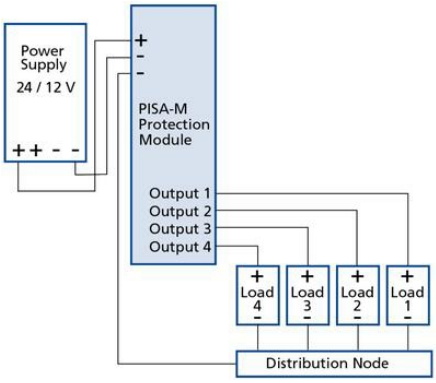

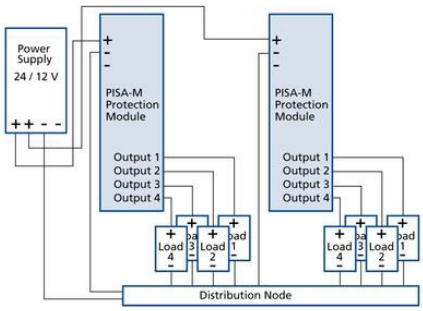

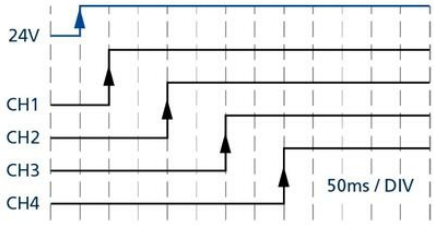

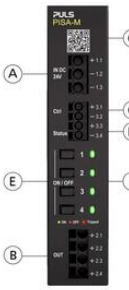

Fig. 14-1: **Front side**

A Input Terminals
Identical poles are internally connected.
(+) 1.1 Positive input pole
(-) 1.2, 1.3 Negative input pole

B Output Terminals
(+) 2.1 Channel 1 positive output pole
(+) 2.2 Channel 2 positive output pole
(+) 2.3 Channel 3 positive output pole
(+) 2.4 Channel 4 positive output pole

C Control Signal Input
(+) 3.1 Signal input positive pole
(-) 3.2 Signal input negative pole
Signal input can be used to send reset signal (1 s active) or for data communication using Digital Coded Interface.

D Status Signal Output
(+) 3.3 Signal output positive pole
(-) 3.4 Signal output negative pole
Signal output can be set to several operation modes.

E Channel Control Buttons
- ⇨ Press of single button to toggle selected output channel ON / OFF
  Required duration of button-press can be configured
- ⇨ Long press of single button to reset selected channel
- ⇨ Press of button combinations to enter configuration modes

Note: See user manual for more information

F Output Channel Status LEDs
- Green: Output channel ON
- Yellow: Output channel overload – prewarning before tripping channel
- Red: Output channel turned OFF (manually or remotely)
- Red (flashing): Output channel tripped due to overload of this channel
- Red (double-flashing): Output channel tripped due to device overload protection or power supply protection, see chapter 9 and 10
- LED OFF: Device is not powered

Note: For other blinking codes, see user manual

G QR code for direct access to documentation

5. Turn Output Channels ON or OFF

Each output channel can be switched ON and OFF individually.
The required duration of button press can be configured, see chapter 10 "Button Reaction Style".

- Output channel is ON → LED lights up green
- Output channel is OFF → LED lights up red

⇨ Press the Channel Control Button (CCB) for the output channel to be modified depending on the selected button reaction style:
- ⇨ 50 ms in standard mode or
- ⇨ 1 s in long press mode

✓ The output channel will switch between ON and OFF.

6. Check Current Tripping Setpoint of Each Output Channel

Each LED indicates the current tripping setpoint for each output channel.
For example: LED 1 shows setting of output channel 1.

1. The number of flashes indicates current setting in ampere.
   For example: LED 1 flashes 4 x, set current tripping setpoint for output channel 1 is 4 A.
2. The sequence will be shown two times.
3. The device exits the checking mode and will return to regular operation.

⇨ Press **CCB1** and **CCB4** simultaneously for **50 ms**.

✓ Each LED will indicate the current tripping setpoint for each output channel by flashing green.

ℹ Pressing any button during LED flashing stops the checking mode immediately.

12. Select Communication Mode

The device will exit setting mode automatically after **4 s** inactivity.

The device is equipped with two signal ports. Signal status output (pin 3.1 – 3.2) and signal control input (pin 3.3 – 3.4). These ports can be configured as follows:

Tripping Alarm:
Switch closes when at least one or more output channels are tripped.

- Status Signal Output ON → one or more output channels are tripped
- Status Signal Output OFF → no output channel tripped

Digital Coded Interface (DCI):
For more detailed information regarding DCI mode, please refer to the product datasheet.

Output Channel Off Alarm:
Switch closes when one or more channels are tripped or manually turned off.

- Status Signal Output ON → one or more output channels are tripped / turned off
- Status Signal Output OFF → all output channels are turned on

OK-Signal:
Switch closes if all output channels are turned on.
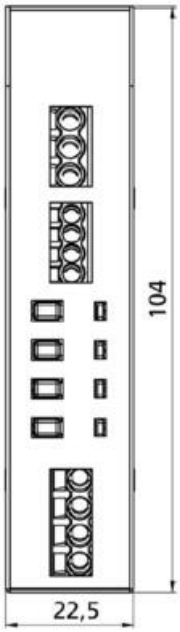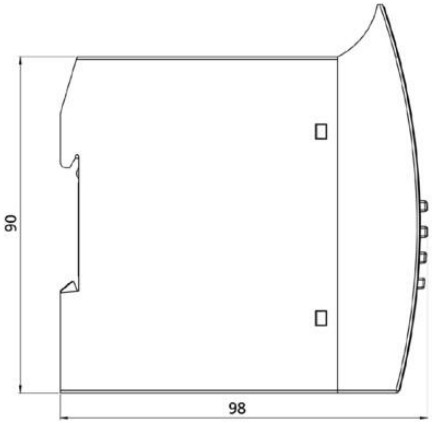
- Status Signal Output ON → all output channels are turned on
- Status Signal Output OFF → one or more output channels are tripped / turned off