ANVA HJO®

MOUNTING INSTRUCTIONS

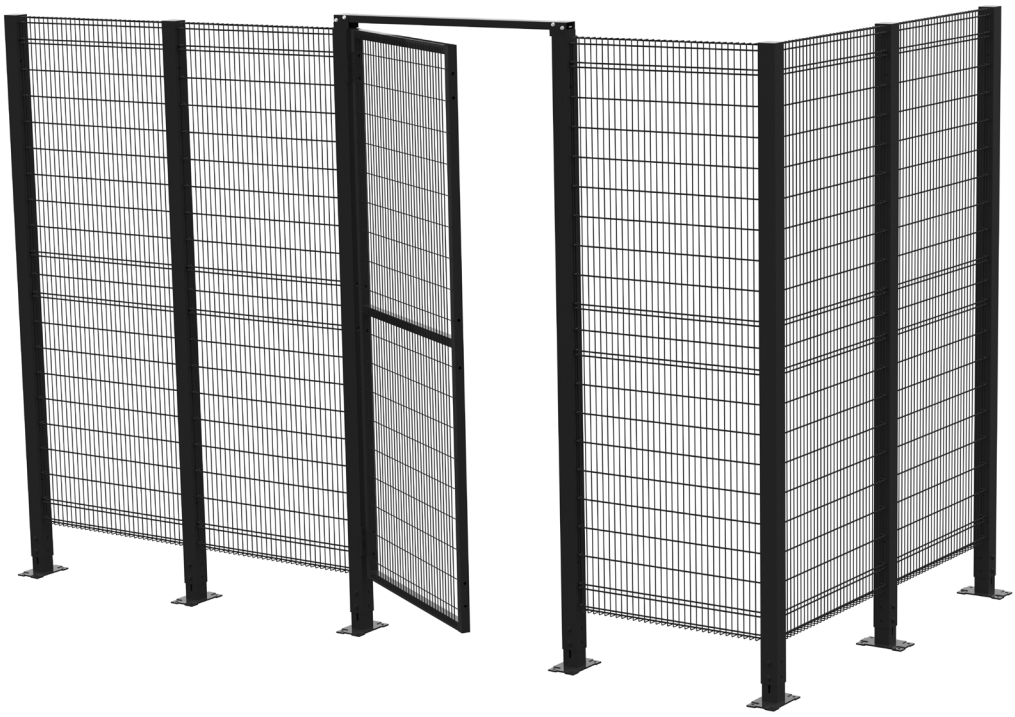

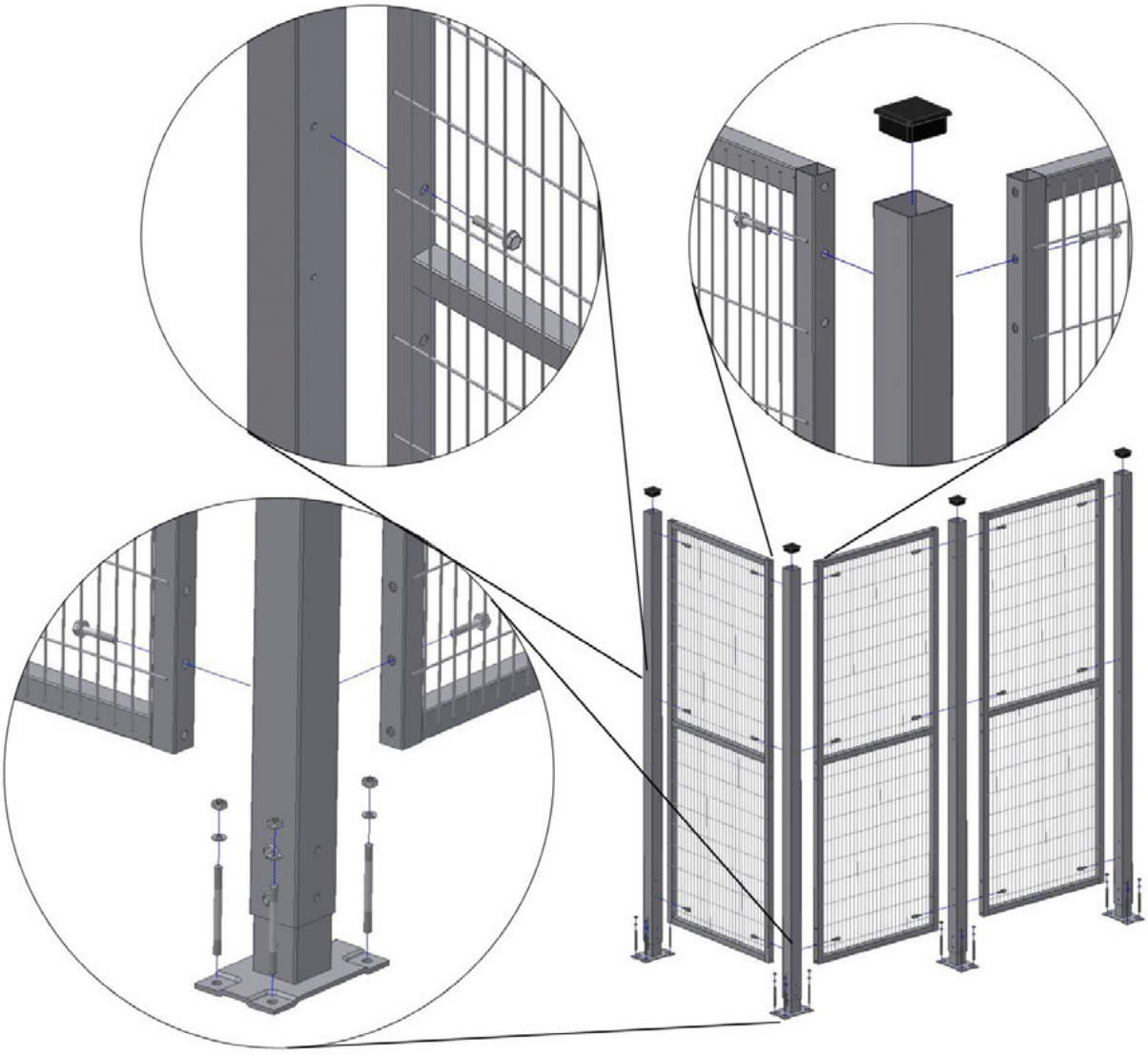

MOUNTING INSTRUCTIONS: SWINGING DOORS

Mounting instructions for swinging doors.

These instructions work for:

SINGLE SWINGING DOOR

- Our article number – 10900150
- Our article number – 10900152
- Our article number – 10900154
- Our article number – 10900155

DOUBLE SWINGING DOOR

- Our article number – 10900240
- Our article number – 10900300

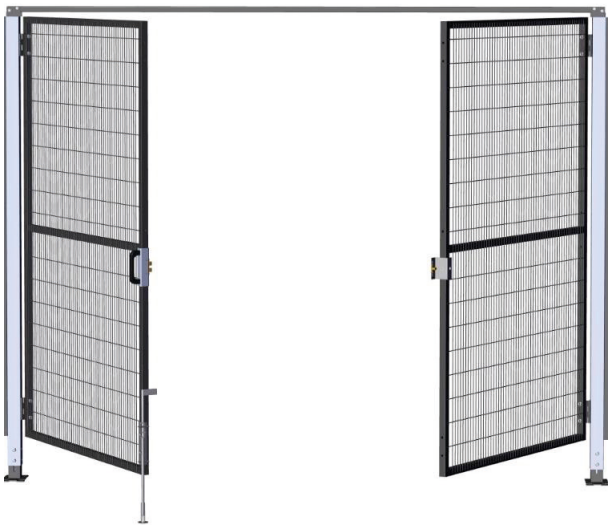

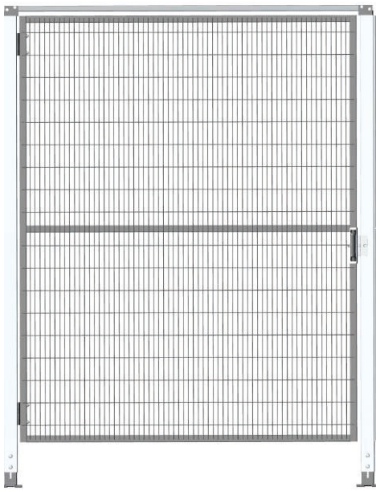

1090015X

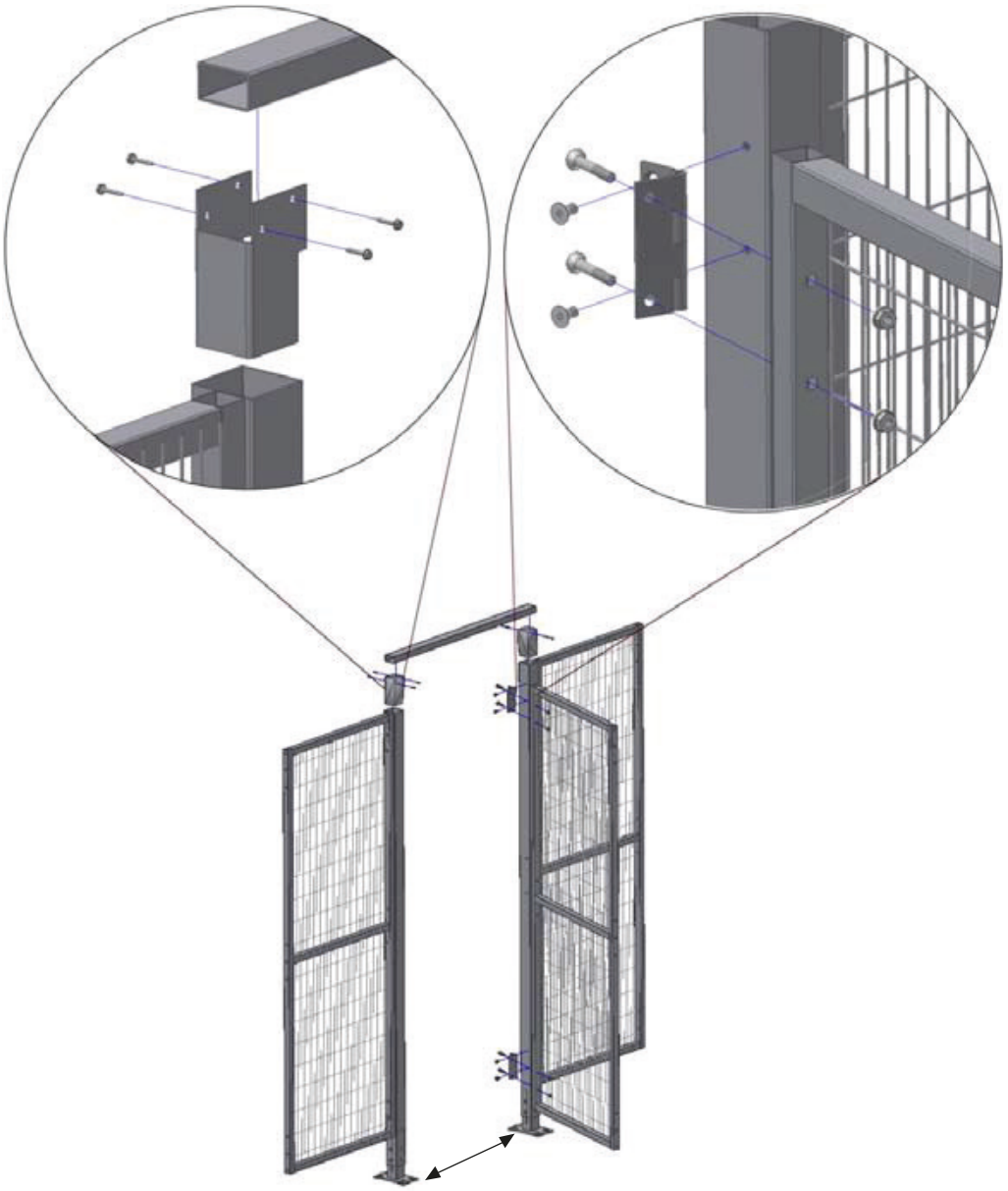

DOORELEMENT + 30 MM

x2 	x1 	x2 	x8 
10000070	**10000XXX**	**10060101**	**07976014019**

10900300

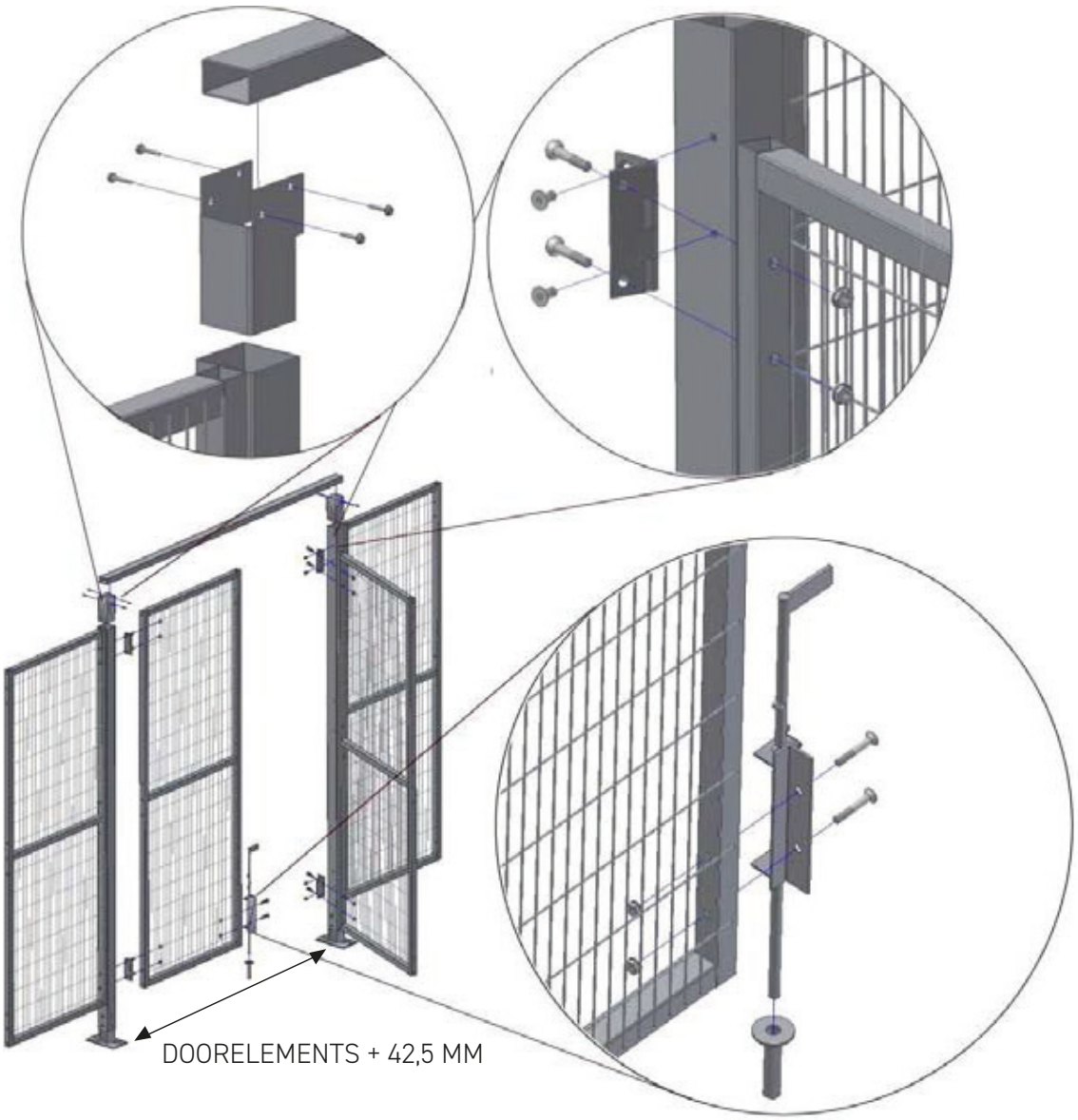

x4 	x1 	x1 	x2 	x8 
10000070	10000700	10000XXX	10060101	07976014019

STEP 1

Place the posts at the ground without bolting them.

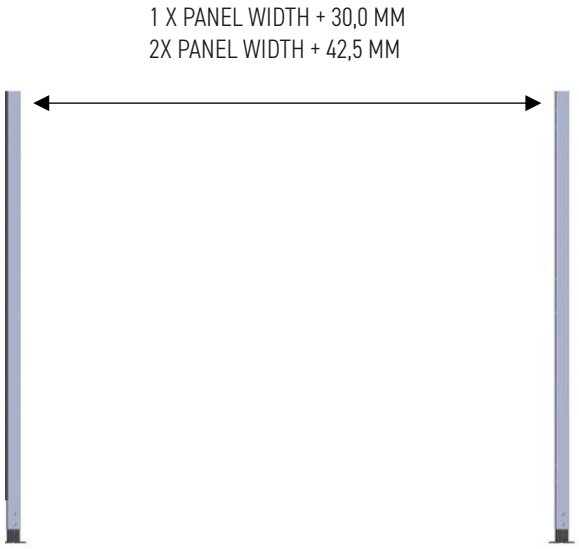

STEP 2

Put crossbar holders into top of each post.

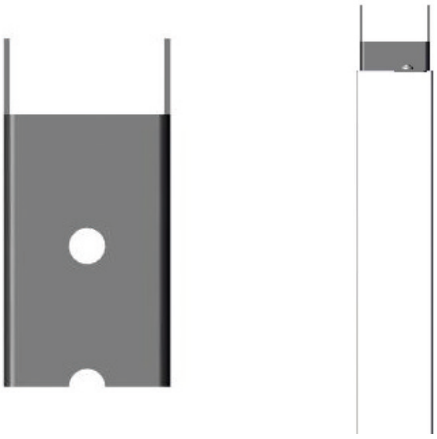

STEP 3

Place the crossbar into the holders.



STEP 4

Use self-drilling screws and screw the crossbar into place.

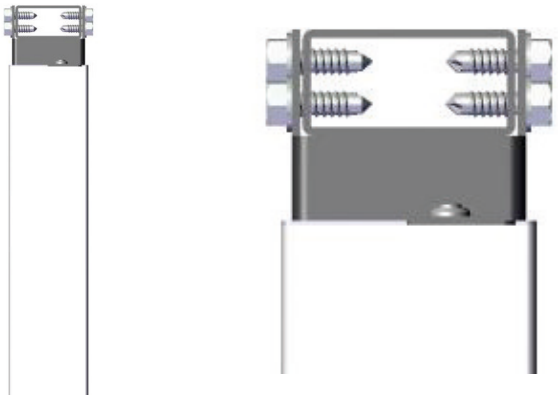



STEP 5

Attach the hinges into the posts by using M8x16 chamfered screws.

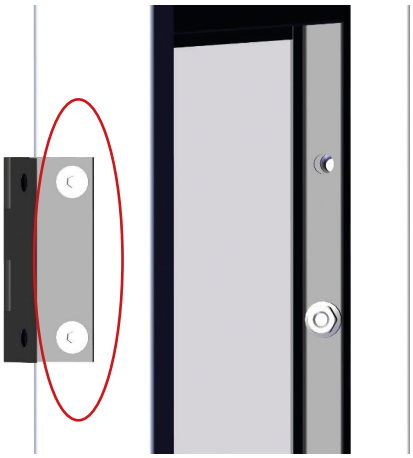

STEP 6

Attach panels to the hinges,
Use M8x45 bolts with
chamfered screws

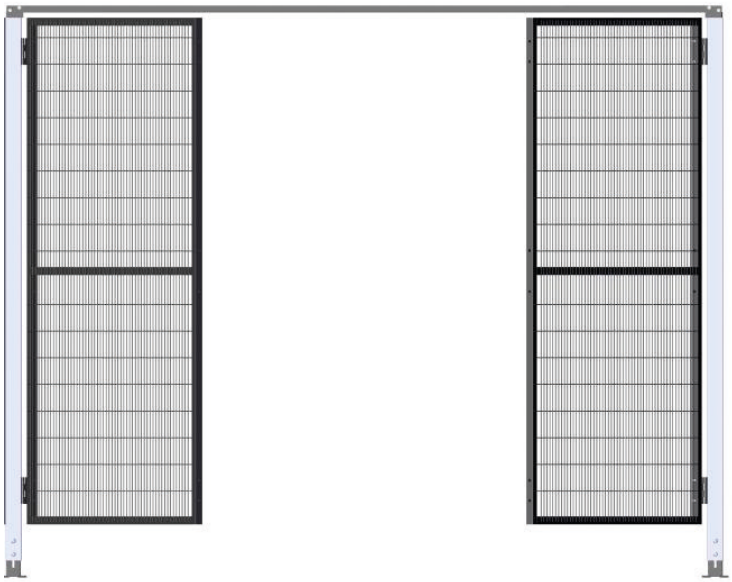



STEP 7

Attach the locking mechanism to one of the panels. For single swinging door, skip this step

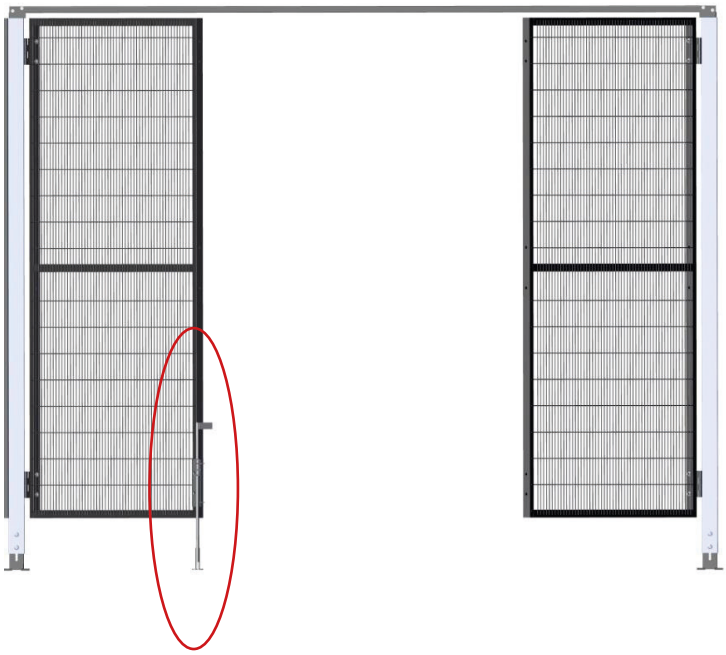

STEP 8

If you bought snap and catch lock, use M8x45 chamfered screws with a nut

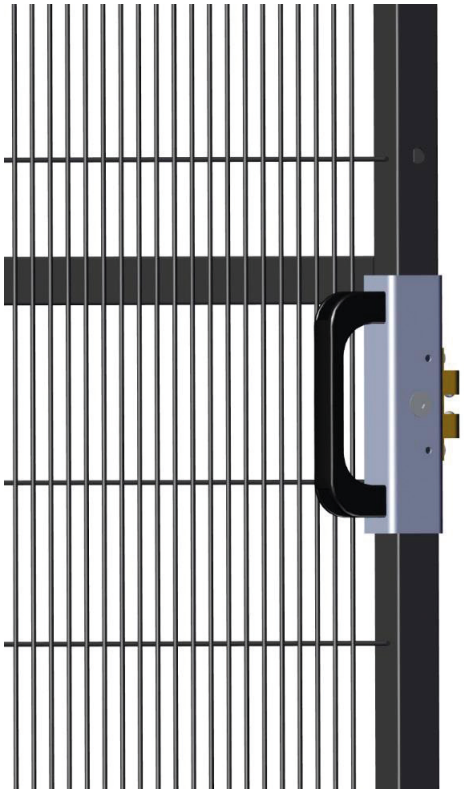

MOUNTING INSTRUCTIONS: SLIDING DOOR

Mounting instructions for sliding door
These instructions work for:

SINGLE SLIDING DOOR

- Our article number – 109001150

DOUBLE SLIDING DOOR

- Our article number – 10901300

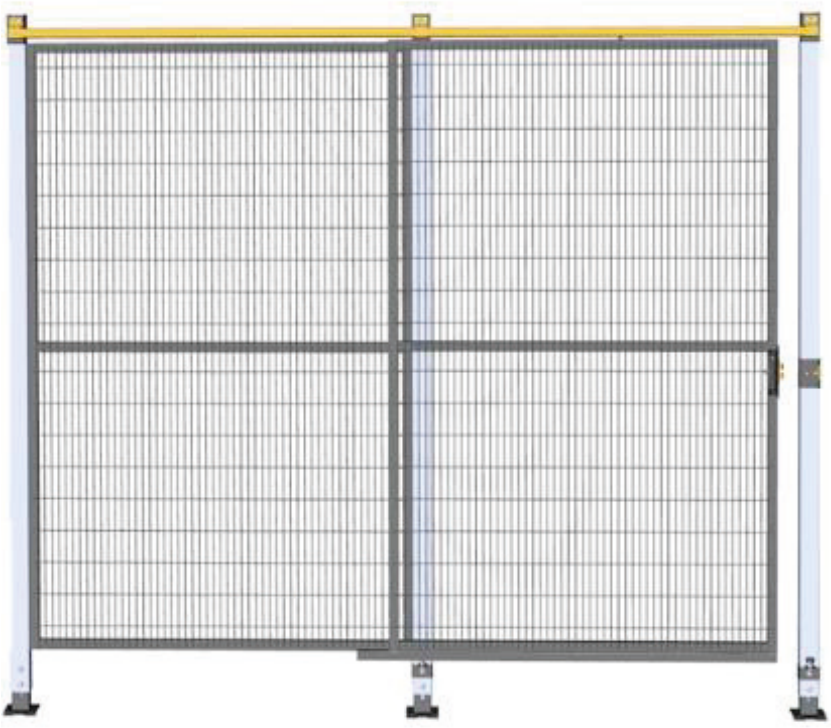

10901150

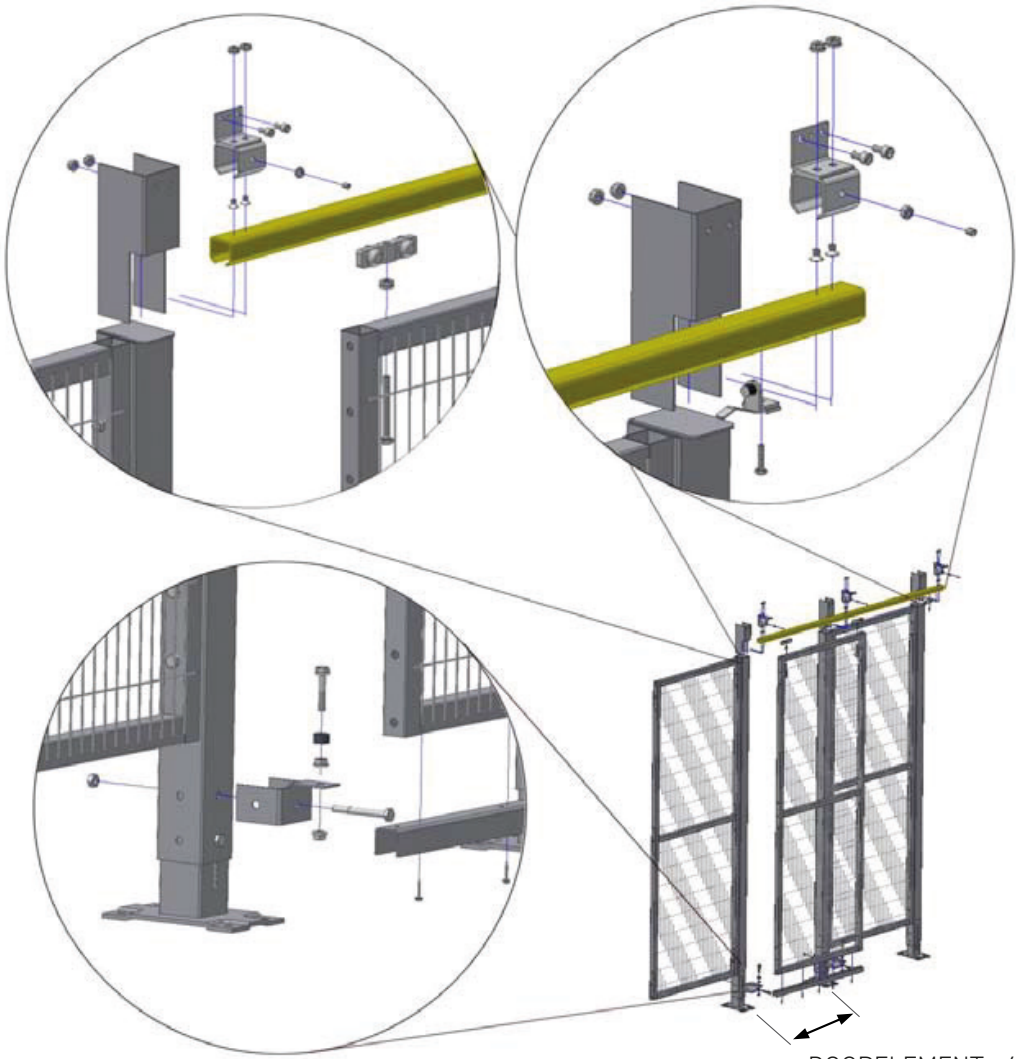

x3 	x2 	x3 	x1 	x1 	x2 	x1 
1000831	10000230	10000240	10000270	10000361	10000821	10000220

L=3 m

x5 	x6 	x6 
07976010016	00912006030	06923006000

10901300

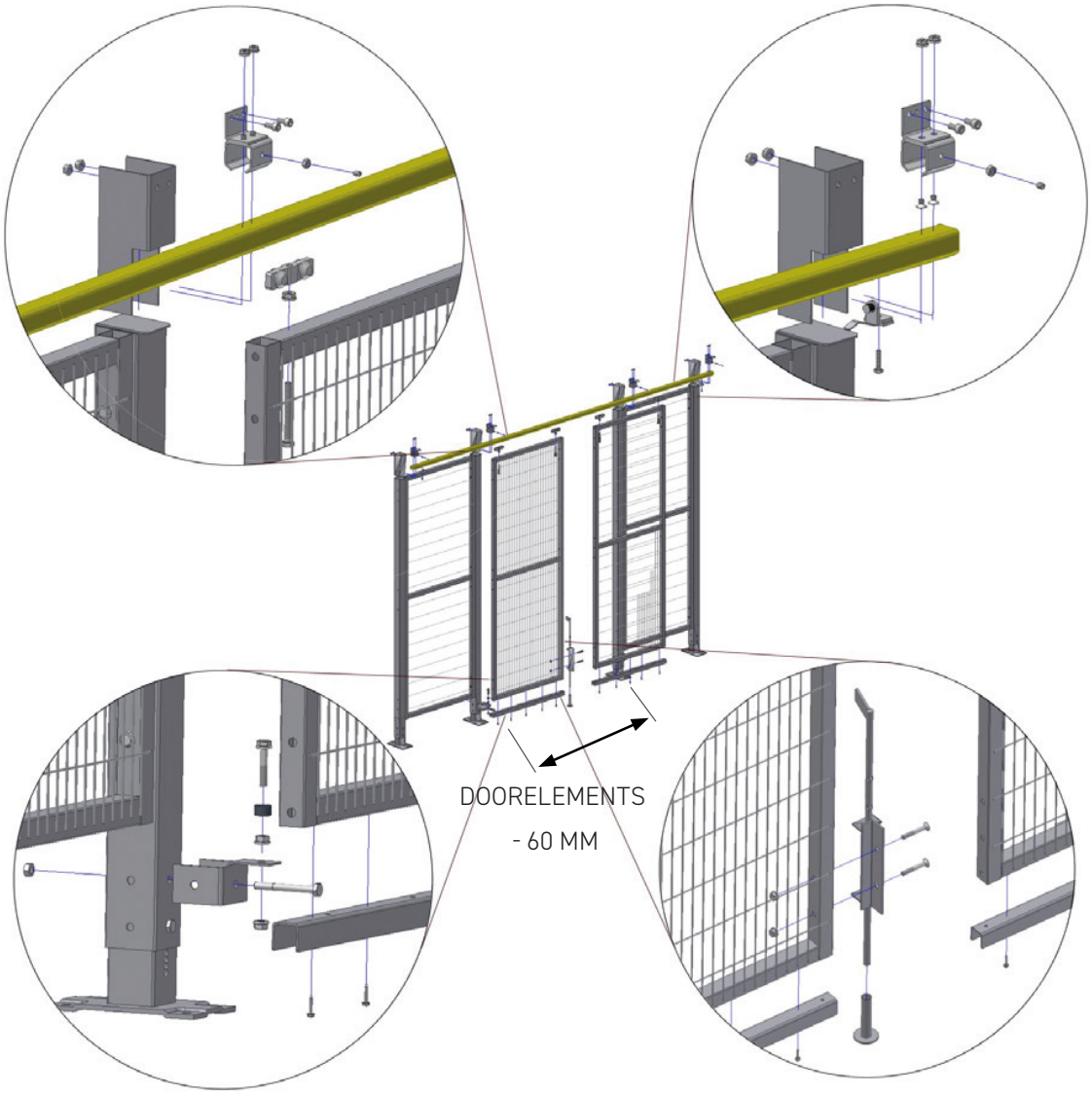

x4 	x4 	x4 	x2 	x2 	x2 	x1  L=6 m
1000831	**10000230**	**10000240**	**10000270**	**10000361**	**10000821**	**10000220**

x10 	x8 	x8 	x1 
07976010016	**00912006030**	**06923006000**	**10000700**

STEP 1

Place the C-Rail holder into the post.
Screw into place by using
M6x30 bolts.

Lock C-rail holder by using
self-drilling screw.

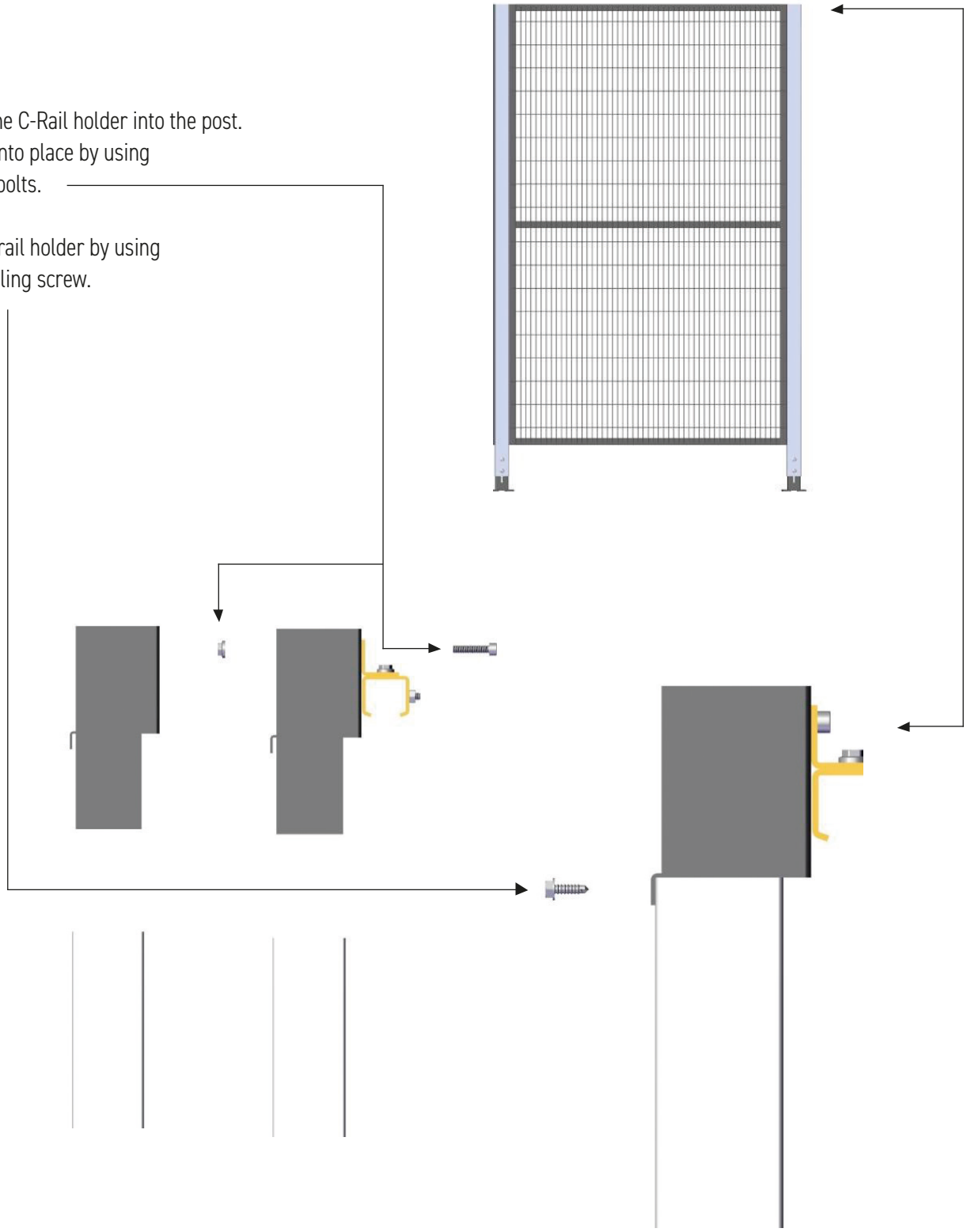

STEP 2

Attach the next panel and posts as shown. Put the second and the third C-rail holder into posts.

Use the same procedure as step 2 .

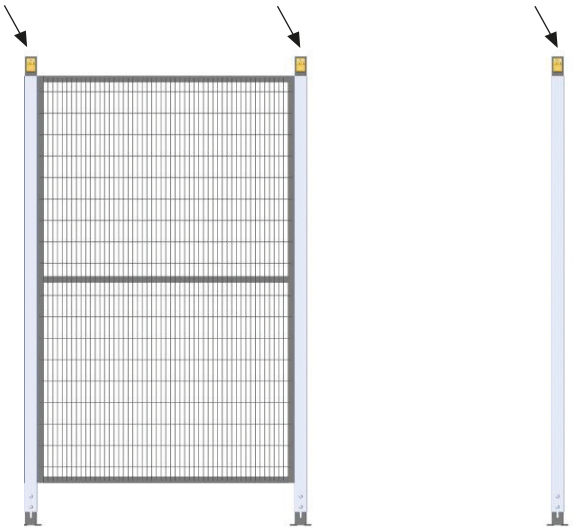

STEP 3

Attach C-Rail into crossbar holders. Lock it into place.

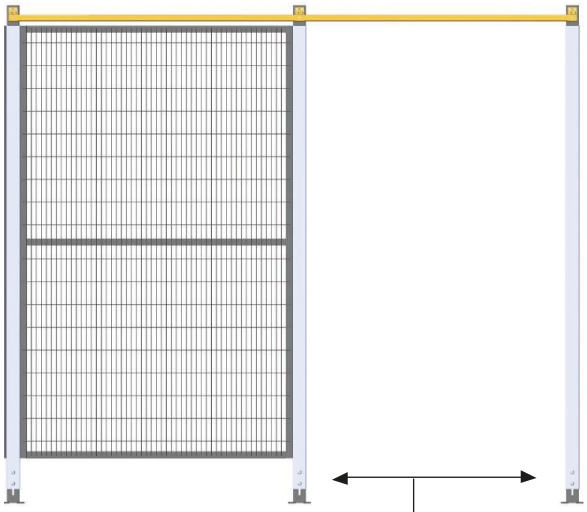

STEP 4

Attach "U" profile holders to the posts.

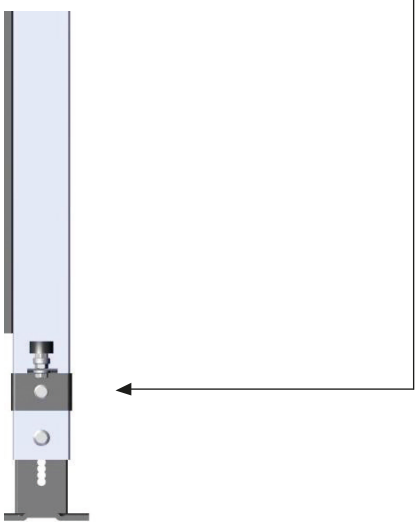

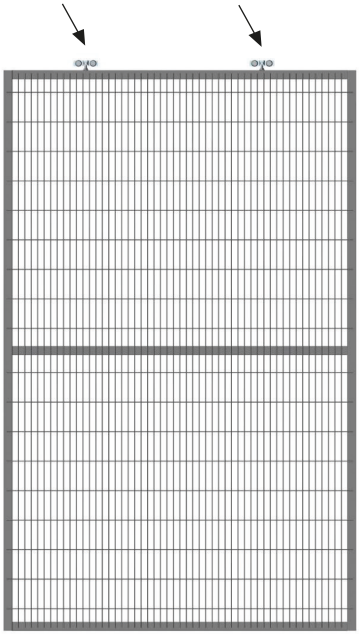

STEP 5

Drill two holes on top of the “Sliding” panel and attach rollers.

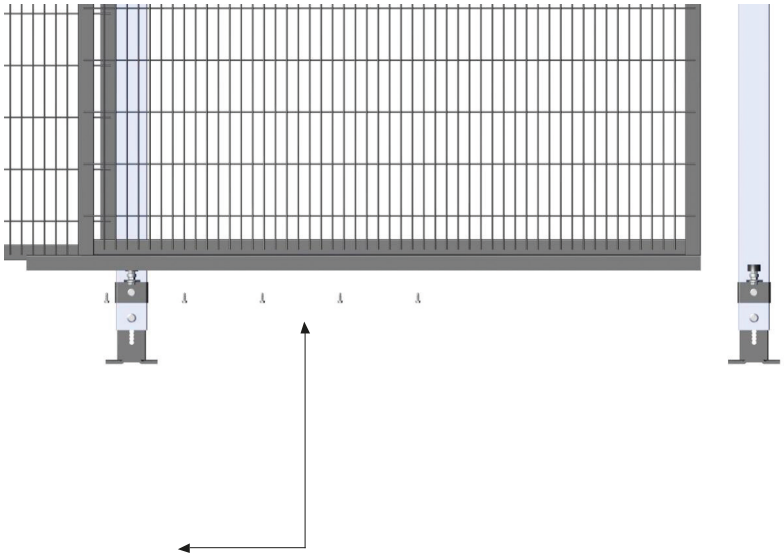

STEP 6

Attach the “U” profile on the bottom of the sliding panel.
Use self-drilling screws.

STEP 7

Slide the panel into the C-rail.

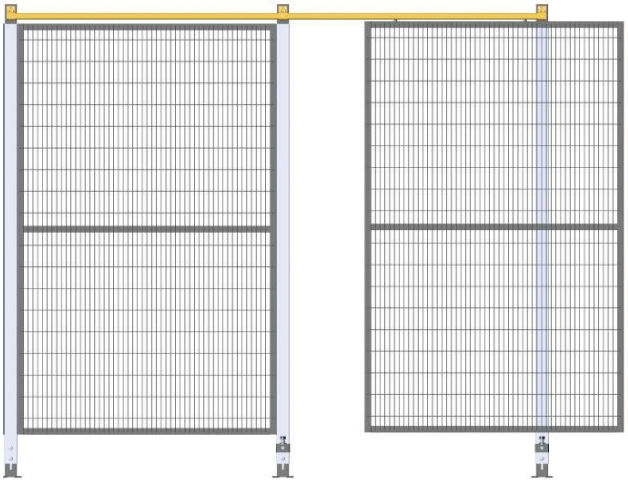

STEP 8

If snap and catch lock is bought:
Attach handle part to the panel by using chamfered M8x45 bolt and a nut.

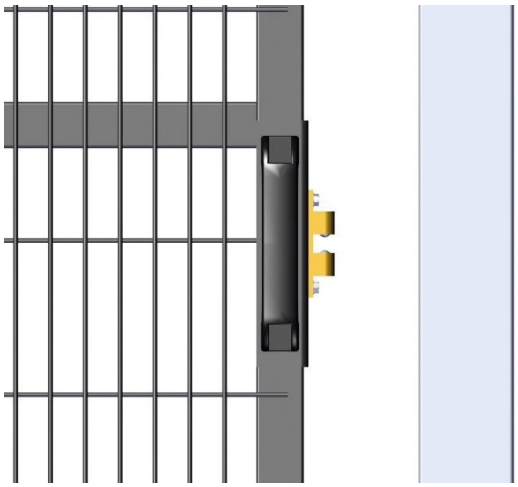

STEP 9

If snap and catch lock is bought:
Attach the receiver part into post by using chamfered M8x16 bolt.

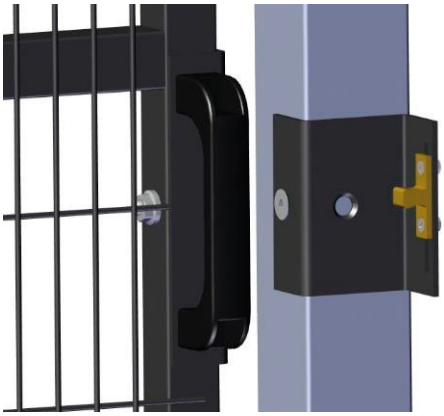

STEP 10

If you bought snap and catch lock, use M8x45 chamfered screws with a nut

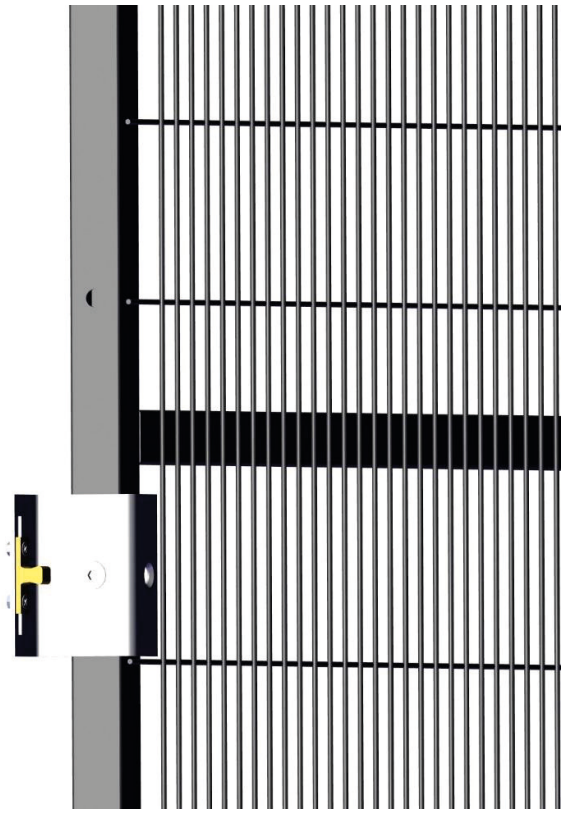

10000790

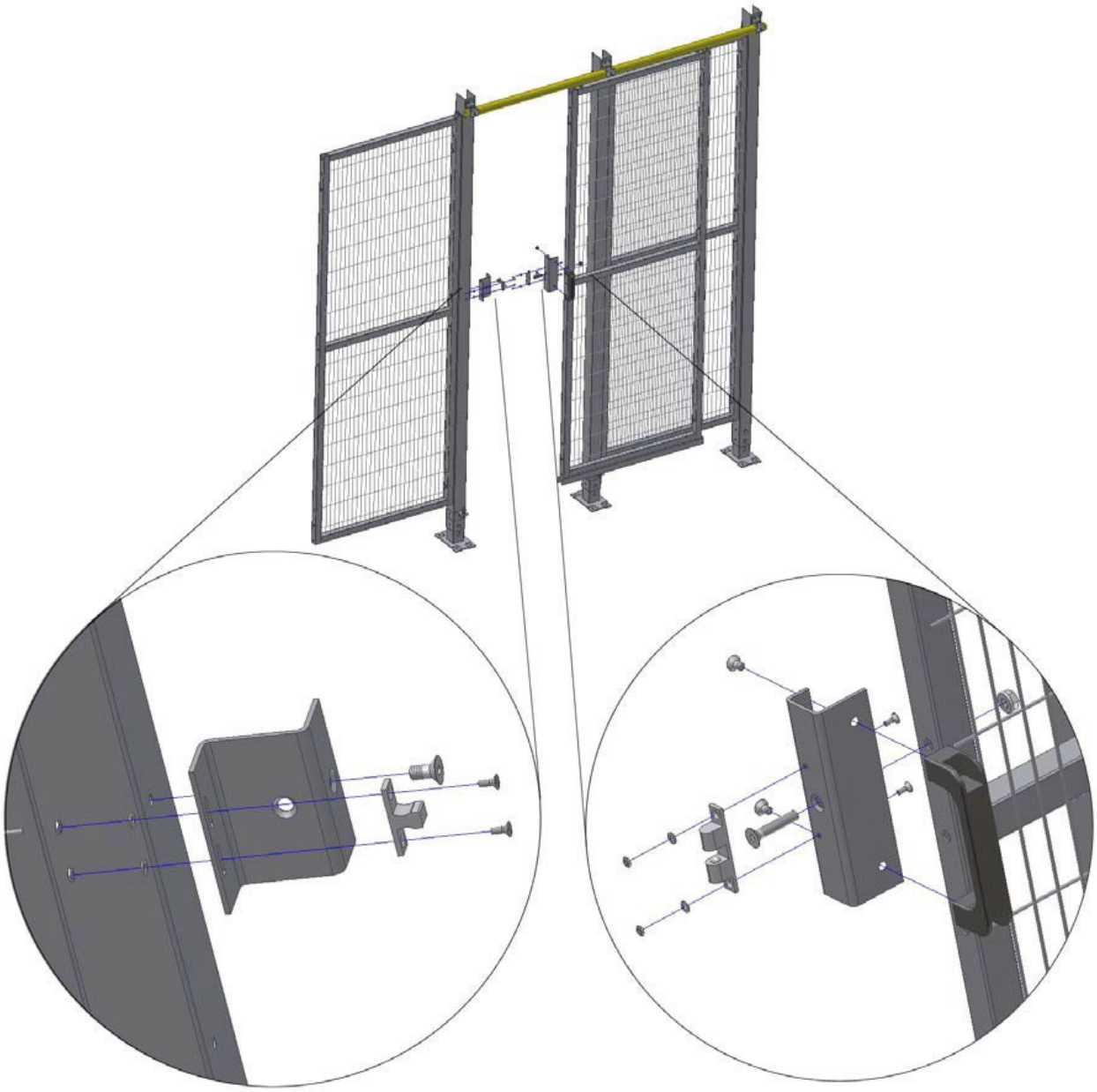



10000790

MOUNTING INSTRUCTIONS: SLIDING DOOR WITHOUT CROSSBAR

Mounting instructions for sliding door without crossbar
These instructions work for:

- Our article number – 10002440

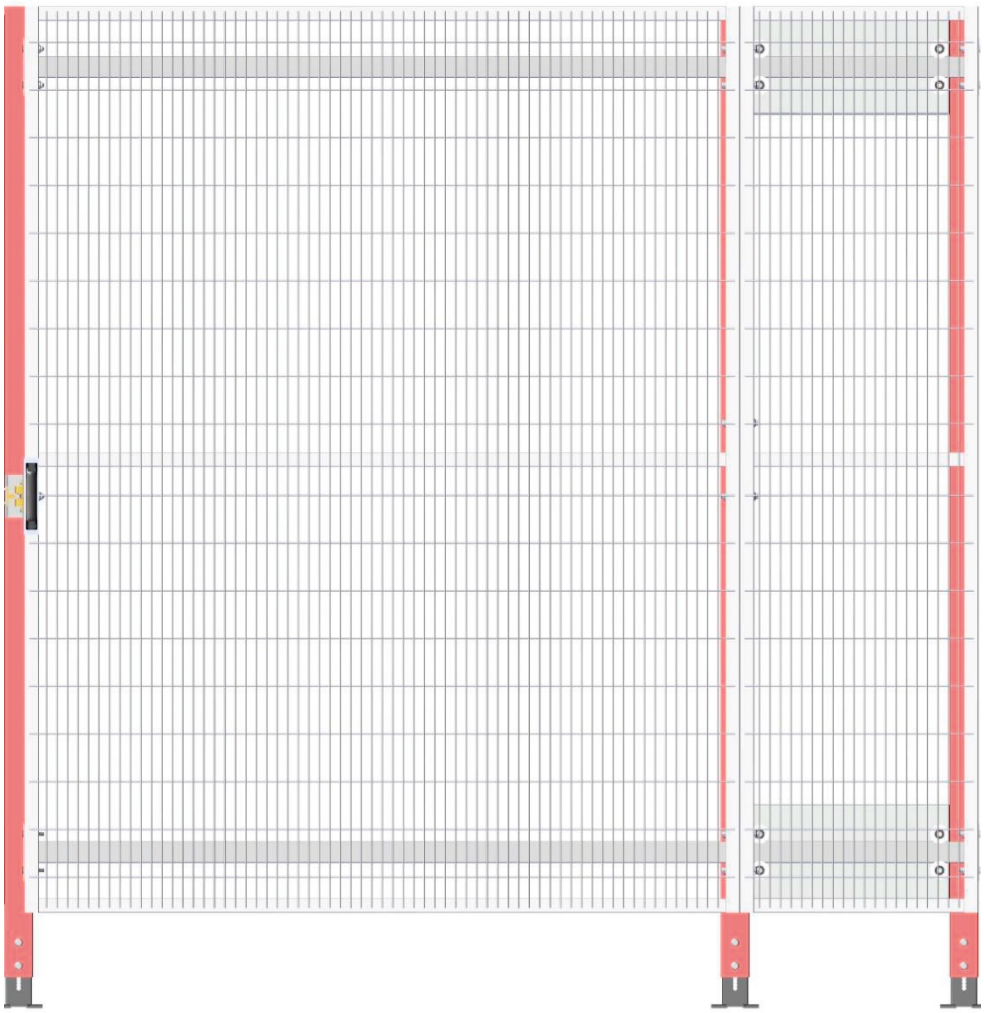

STEP 1

Place the posts without screwing them into ground.

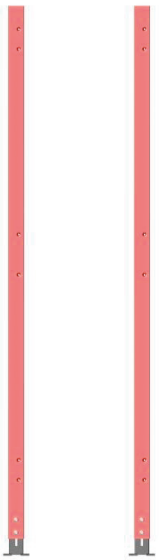

STEP 2

Screw crossbar holders into place.

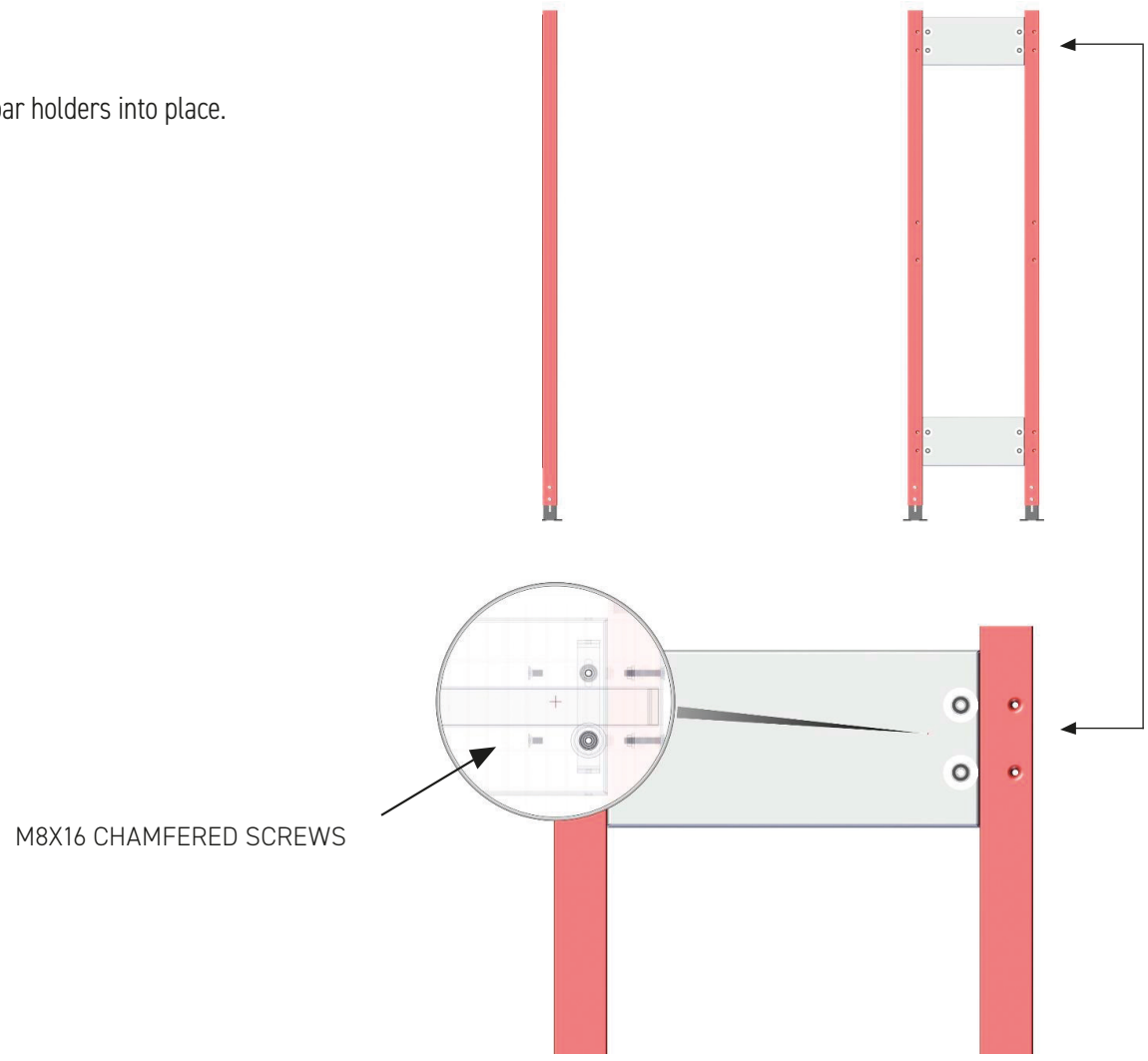

STEP 3

Attach the crossbar into holders.

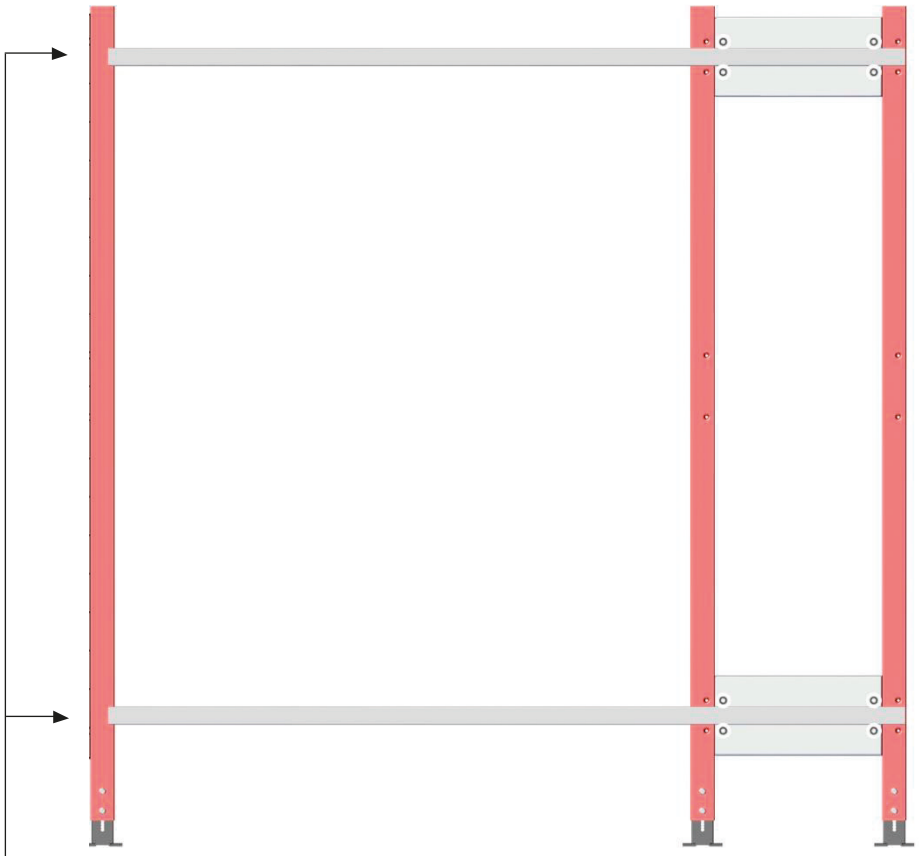

STEP 4

Attach panel holders into crossbar tube.

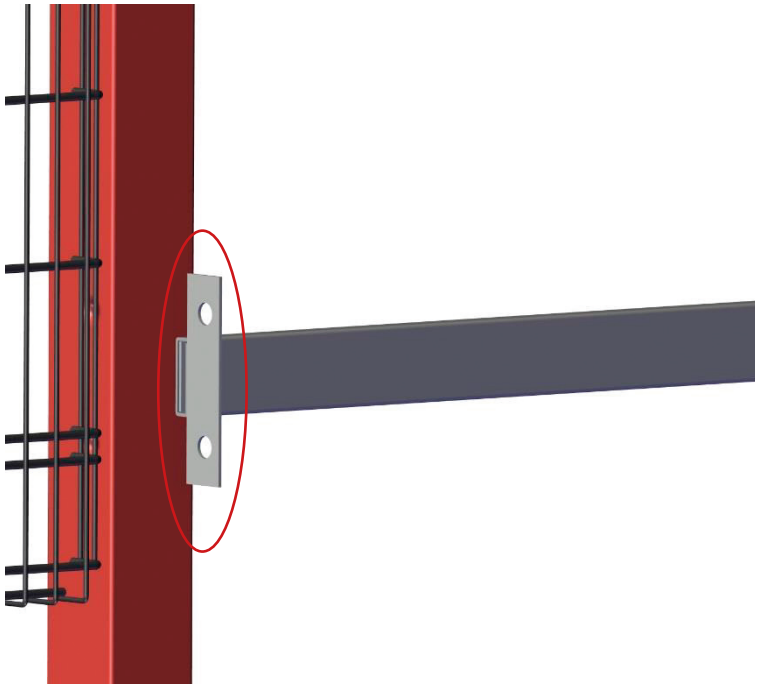

STEP 5

Attach the panel using M8x50 bolts and nut.

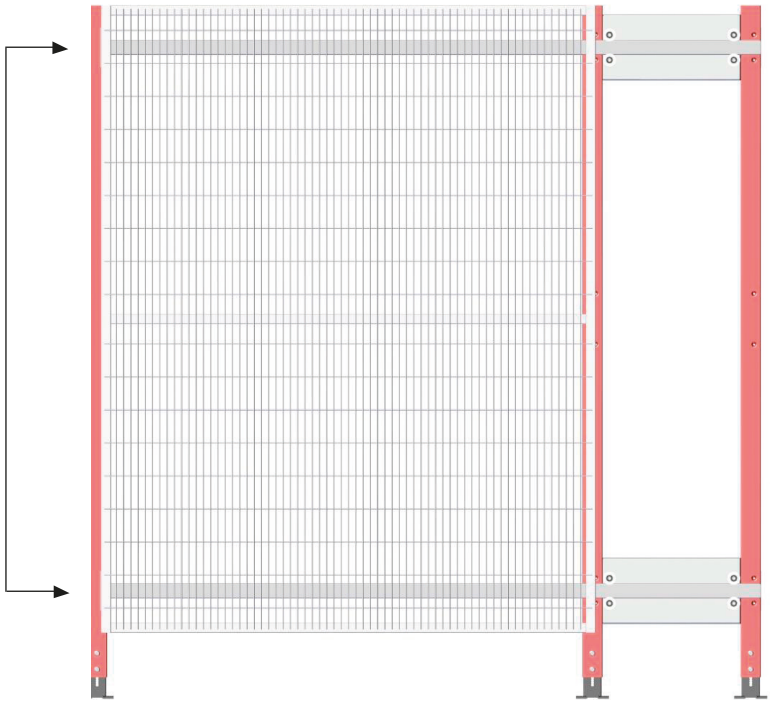

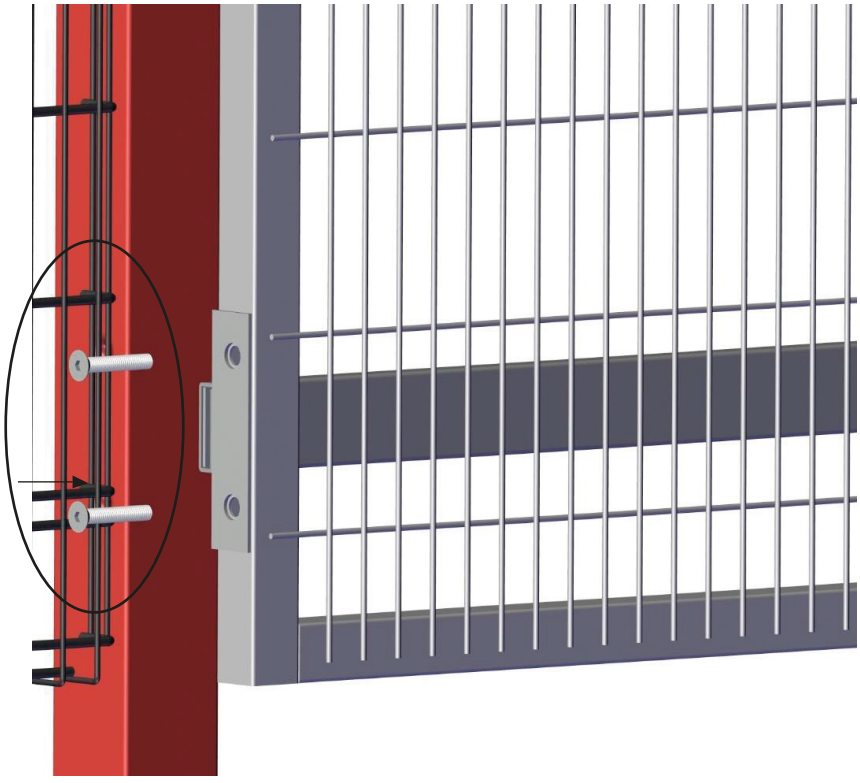

STEP 6

Attach panel holders on both sides of crossbar holder

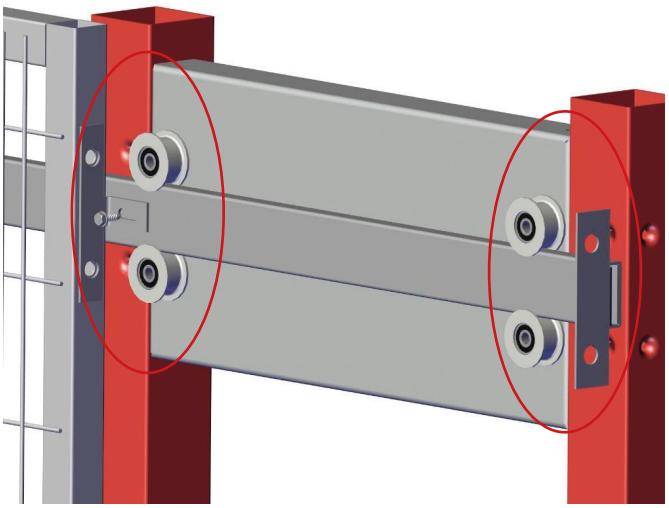

SELF-DRILLING SCREW

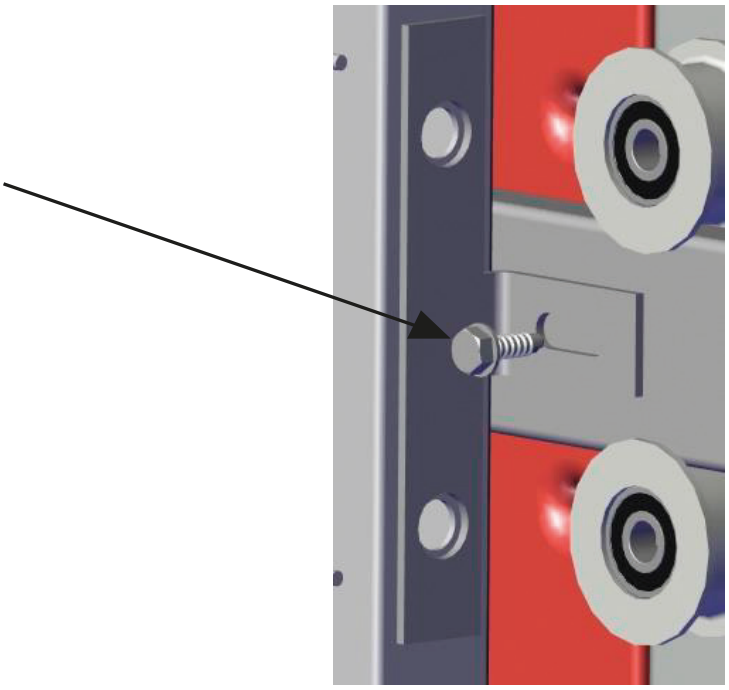

STEP 7

Screw both the panels together and attach the 500 panel into panel holder.

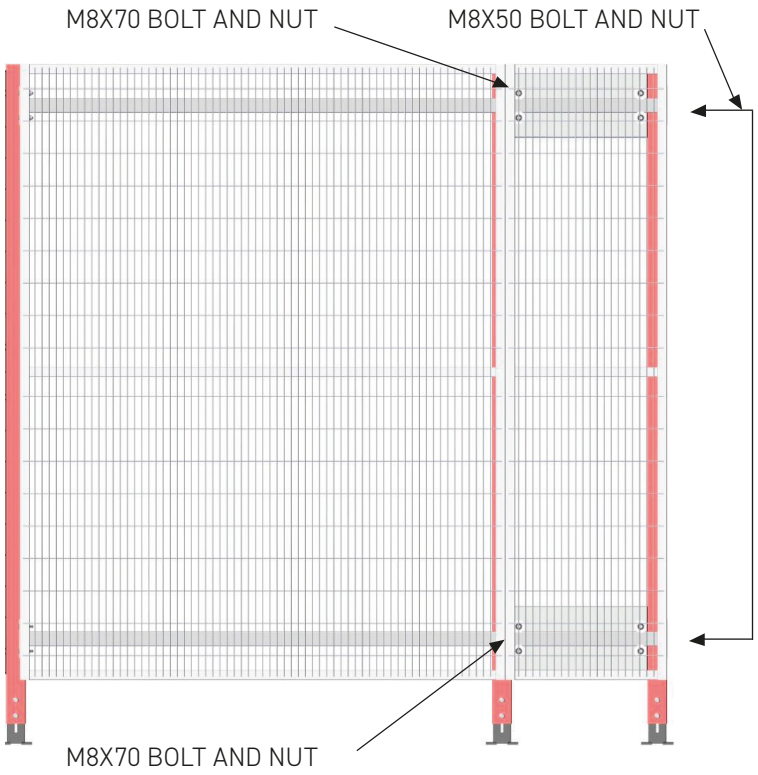

STEP 8

If bought, attach snap and catch lock into the post and panel.

Use chamfered M8x45 for handle part and M8x16 for post

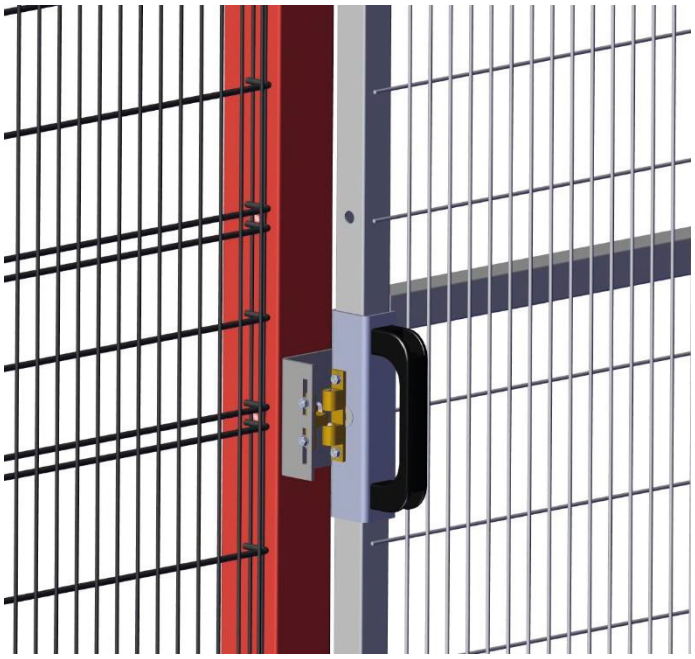

1090XXX

HORIZONTAL CUT KIT FOR T12

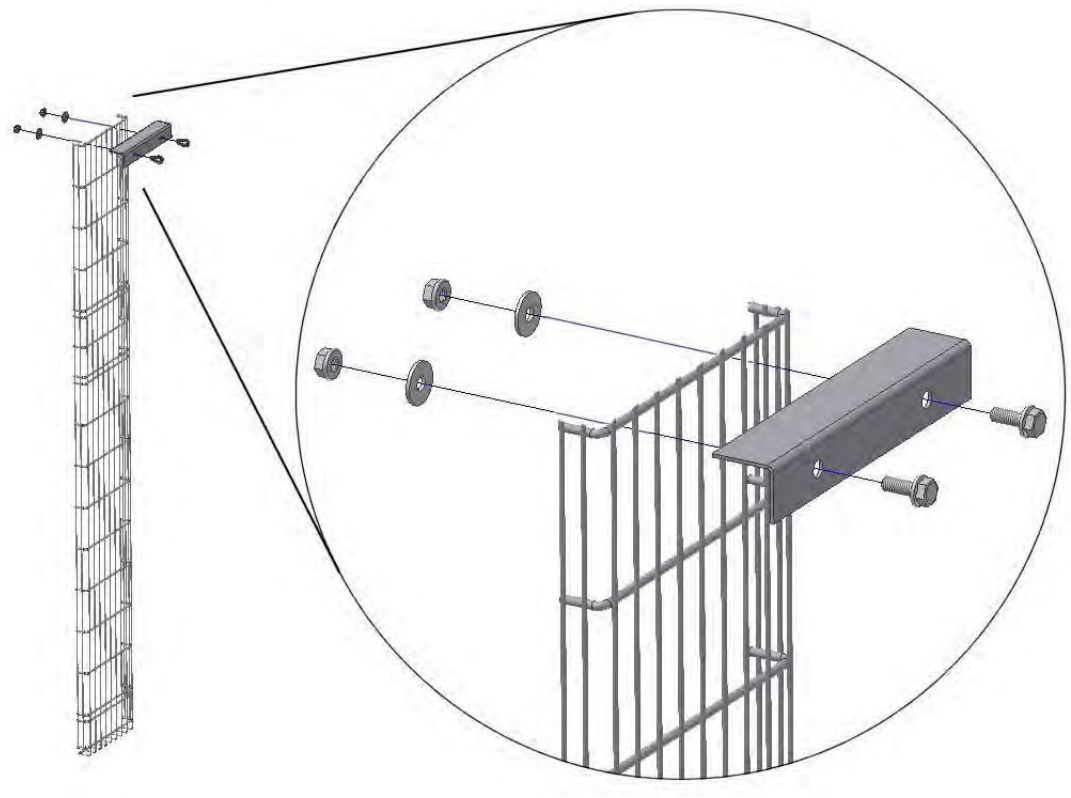

10900090 (200 mm)	10900080 (300 mm)	10900120 (400 mm)	10900110 (500 mm)	10900100 (600 mm)	10900020 (700 mm)	10900030 (800 mm)
x1	x1	x1	x1	x1	x1	x1
12000141	12000131	12000121	12000111	12000101	12000051	12000161
+	+	+	+	+	+	+

10900040 (1000 mm)	10900050 1200 mm)	10900060 (1500 mm)
x1	x1	x1
12000071	12000081	12000091
+	+	+

x2	x2	x2
06921008020	06332008000	03125009352

x2	x2	x2
06921008020	06332008000	03125009352

T10:1090XXX

200 mm...	10900160
300 mm...	10900170
700 mm...	10900180
800 mm...	10900190
1000 mm...	10900200
1200 mm...	10900210
1500 mm...	10900220

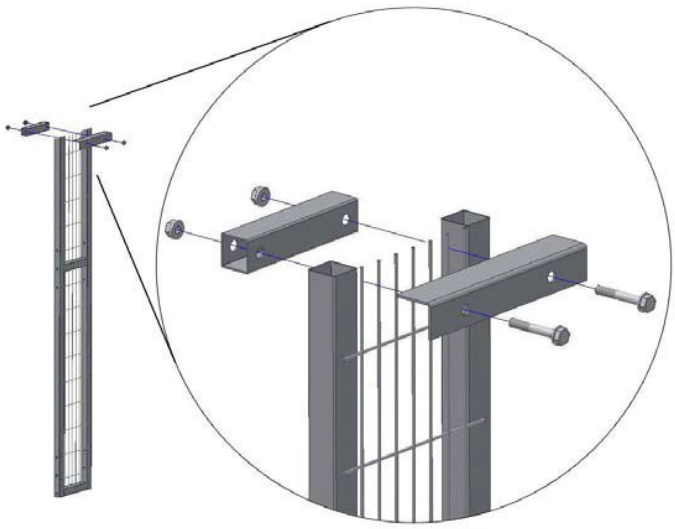

T12:1090XXX

1900 MM

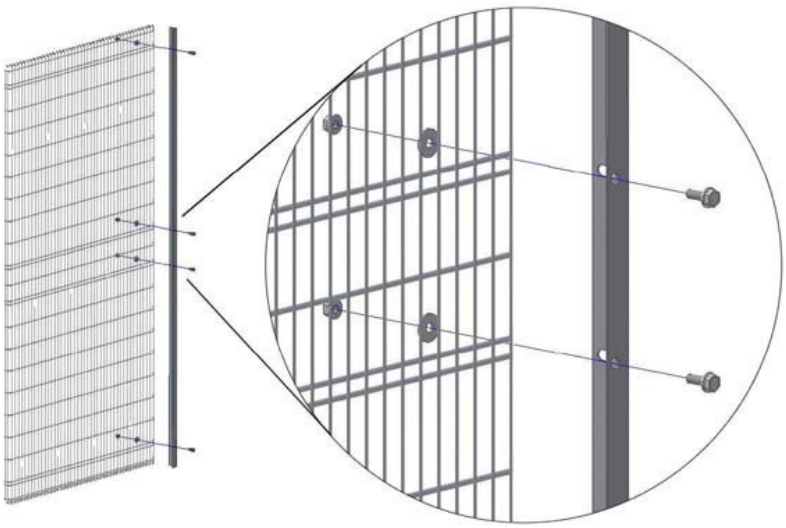

x1	x4	x4	x4
			
12000011	**06921008020**	**06332008000**	**03125009352**

T10:10900070

1900 MM

MOUNTING TECHNIQUE 1

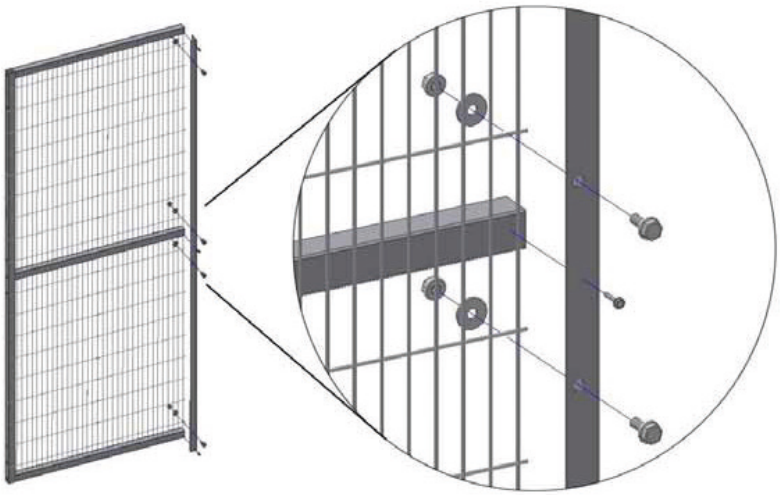

MOUNTING TECHNIQUE 2

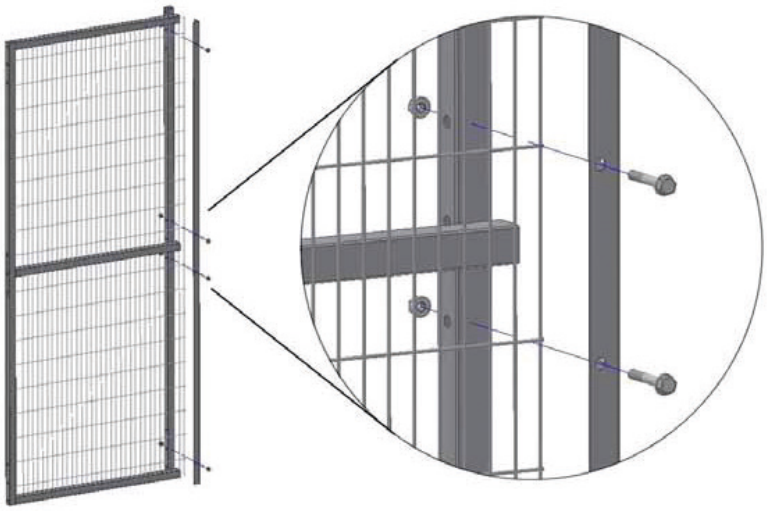

x1	x1	x4	x4	x4	x4	x10
						
12000011	10000191	06921008050	06921008020	06332008000	03125009352	07976014019

more than components

PÄÄKONTTORI

Käyntiosoite:
Fiskarsinkatu 3, 20750 TURKU
Postiosoite:
PL 9, 20101 TURKU
www.oem.fi

ASIAKASPALVELU

Puh. 0207 499 499
Fax 0207 499 456
e-mail: info@oem.fi

MYYNTIKONTTORI

Oulu
Puh. 0207 499 499
Tapsitie 6, 90620 OULU

A part of OEM INTERNATIONAL
Listed on the Stockholm Stock Exchange